HKTDC

# Hong Kong Electronics Fair (Spring Edition)
# 香港春季電子產品展

## OPTION B (LOW SHOWCASE - BLUE)

## 5M x 3M Hall of Fame Booth
五米乘三米品牌薈萃廊特級攤位

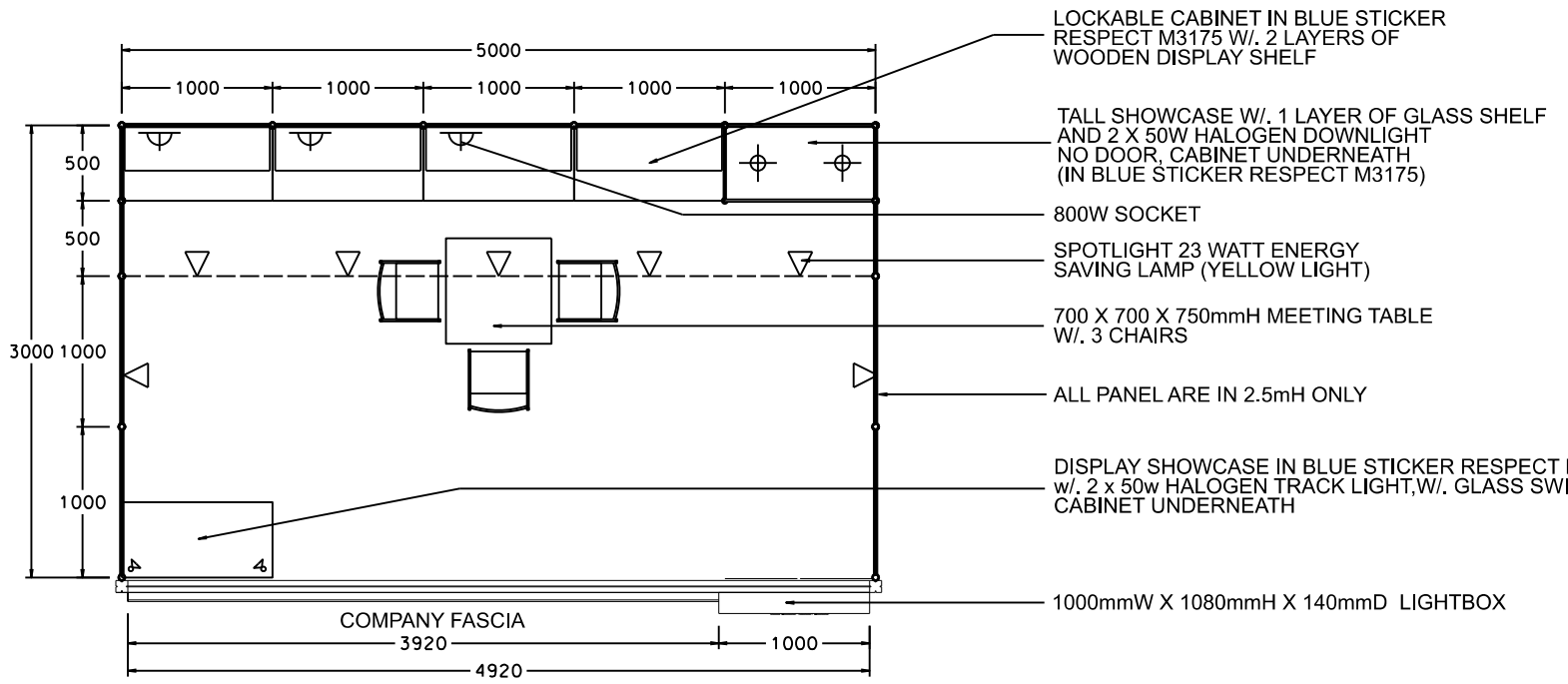


PLAN

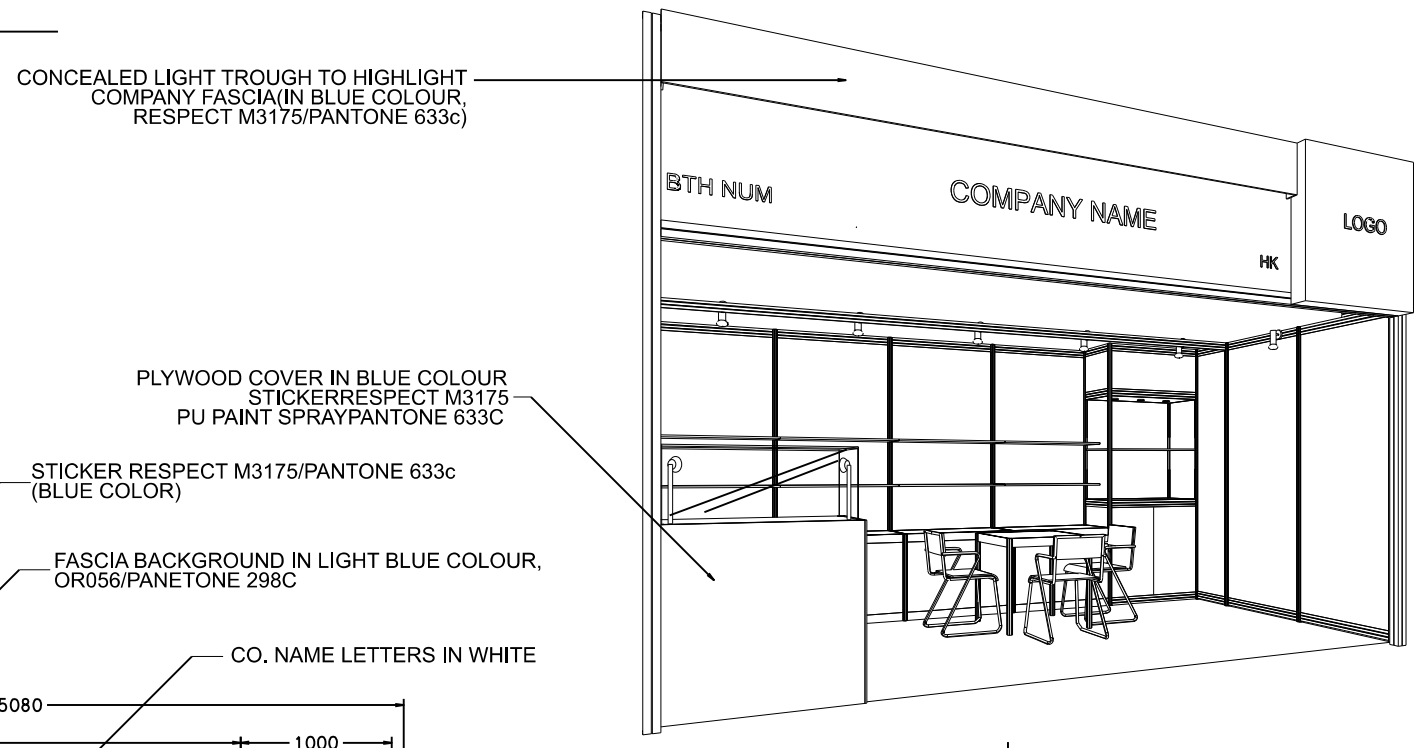


PERSPECTIVE

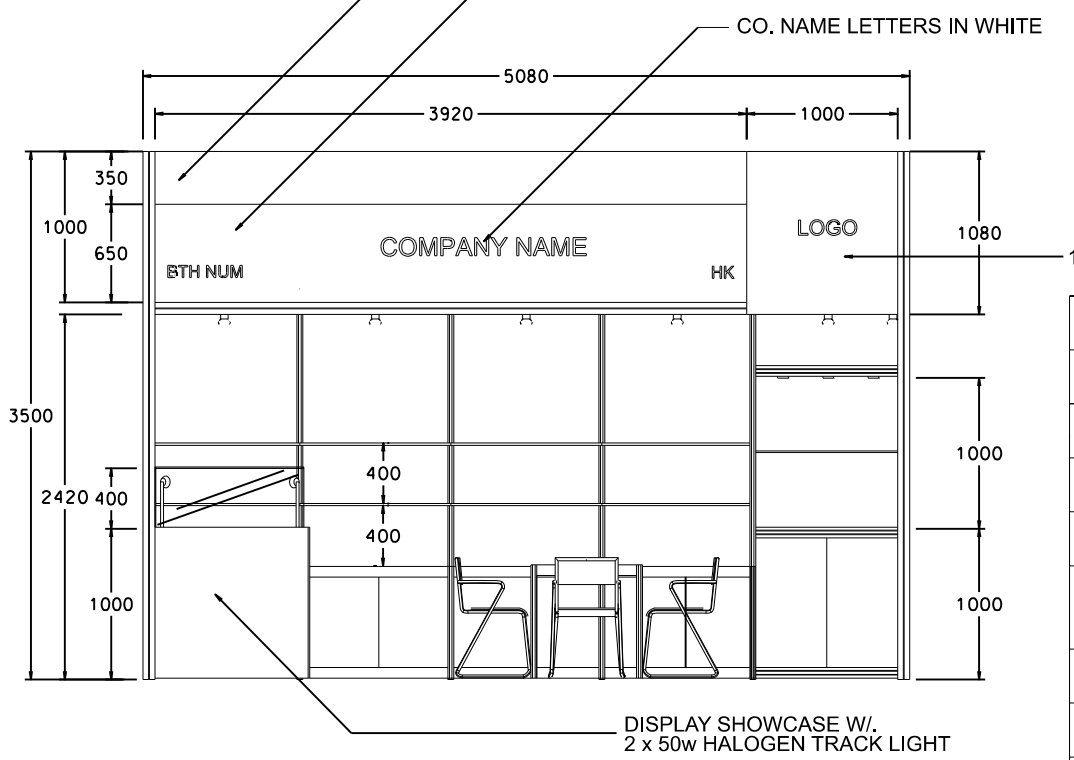


ELEVATION

| BOOTH SPECIFICATIONS | | QTY. |
|---|---|---|
| | LOCKABLE CABINET 1000L x 500W x 750H mm | 4 |
| | WOODEN DISPLAY SHELF FLAT (3000W X 300D mm) | 2 |
| | WOODEN DISPLAY SHELF FLAT (1000W X 300D mm) | 2 |
| | DISPLAY SHOWCASE W/. 2 X HALOGEN TRACK LIGHT W/. GLASS SWING DOOR, CABINET UNDERNEATH | 1 |
| | TALL SHOWCASE W/. 1 LAYER OF GLASS SHELF AND 2 X 50W HALOGEN DOWNLIGHT (NO GLASS DOOR) CABINET UNDERNEATH | 1 |
| | 800W SOCKET | 3 |
| | SPOTLIGHT 23 WATT ENERGY SAVING LAMP (YELLOW LIGHT) | 7 |
| | 700W x 700D x 750H mm MEETING TABLE | 1 |
| | BLACK LEATHER CHAIR | 3 |
| | CEILING BEAM | 5M |
| | RUBBISH BIN & CARPET (15sqm.) | |

*The Hong Kong Trade Development Council reserves the right to change the configuration if necessary.
*如有需要，香港貿易發展局有權更改攤位結構。

SED/3
2015.09.24
14:29:55 +08'00'

24/9/2015 10:21:07